Russound®

ST2-XM2
Smart Tuner

Instruction Manual

SATELLiTE RADiO

XM radio service requires a monthly subscription from XM Satellite Radio

To subscribe, contact XM on the web at www.xmradio.com

or by phone 800.967.2346

IMPORTANT SAFEGUARDS

WARNING: TO REDUCE THE RISK OF FIRE OR ELECTRIC SHOCK, DO NOT EXPOSE THIS APPLIANCE TO RAIN OR MOISTURE.

CAUTION: TO REDUCE THE RISK OF ELECTRIC SHOCK, DO NOT REMOVE COVER. NO USER - SERVICEABLE PARTS INSIDE. REFER SERVICING TO QUALIFIED SERVICE PERSONNEL.

The lightning flash with arrowhead symbol, within an equilateral triangle, is intended to alert the user to the presence of uninsulated "dangerous voltage" within the product's enclosure that may be of sufficient magnitude to constitute a risk of electric shock to persons.

The exclamation point within an equilateral triangle is intended to alert the user to the presence of important operating and maintenance (servicing) instructions in the literature accompanying the appliance.

If you have any questions please call Russound Inc. at 1-800-638-8055 or 603-659-5170.

Safety Instructions:

1. Read Instructions - All the safety and operating instructions should be read before the appliance is operated.
2. Retain Instructions - The safety and operating instructions should be retained for future reference.
3. Heed Warnings - All warnings on the appliance in the operating instructions should be adhered to.
4. Follow Instructions - All operating and user instructions should be followed.
5. Water and Moisture - The appliance should not be used near water; for example, near a bathtub, washbowl, kitchen sink, laundry tub, in a wet basement, or near a swimming pool.
6. Carts and Stands - The appliance should be used only with a cart or stand that is recommended by the manufacturer. An appliance and cart combination should be moved with care. Quick stops, excessive force and uneven surfaces may cause the appliance and cart combination to overturn.

7. Wall or Ceiling Mounting - The appliance should be mounted to a wall or ceiling only as recommended by the manufacturer.
8. Ventilation - The appliance should be situated so that its location or position does not interfere with its proper ventilation. For example, the appliance should not be situated on a bed, sofa, rug, or similar surface that may block the ventilation openings, or placed in a built-in installation, such as a bookcase or cabinet that may impede the flow of air through the ventilation openings.
9. Heat - The appliance should be situated away from heat sources such as radiators, heat registers, stoves, or other appliances (including amplifiers) that produce heat.
10. Power Sources - The appliance should be connected to a power supply only of the type described in the operating instructions or as marked on the appliance.
11. Grounding or Polarization - Precaution should be taken so that the grounding or polarization means of an appliance is not defeated.
12. Power Cord Protection - Power supply cords should be routed so that they are not likely to be walked on or pinched by items placed upon or against them, paying particular attention to cords at plugs, receptacles, and the point where they exit from the appliance.
13. Cleaning - The appliance should be cleaned only as recommended by the manufacturer.
14. Non-use Periods - The power cord of the appliance should be unplugged from the outlet when left unused for a long period of time.
15. Object and Liquid Entry - Care should be taken so that objects do not fall and liquids are not spilled into the enclosure through the openings.
16. Damage Requiring Service - The appliance should be serviced by qualified service personnel when:

    A. The power supply cord or the plug has been damaged; or

    B. Objects have fallen, liquid has been spilled into the appliance; or

    C. The appliance has been exposed to rain; or

    D. The appliance does not appear to operate normally; or

    E. The appliance has been dropped or the enclosure is damaged.

17. Servicing - The user should not attempt to service the appliance beyond that described in the operating instructions. All other servicing should be referred to qualified service personnel.

Precautions:

1. Power – WARNING: BEFORE TURNING ON THE POWER FOR THE FIRST TIME, READ THE FOLLOWING SECTION CAREFULLY.
2. Do Not Touch The ST2 With Wet Hands – Do not handle the ST2 or power cord when your hands are wet or damp. If water or any other liquid enters the ST2 cabinet, unplug the unit from power immediately and take the ST2 to a qualified service person for inspection.
3. Location of ST2 – Place the ST2 in a well-ventilated location. Take special care to provide plenty of ventilation on all sides of the ST2 especially when it is placed in an audio rack. If ventilation is blocked, the ST2 may overheat and malfunction. Do not expose the ST2 to direct sun light or heating units as the ST2 internal components temperature may rise and shorten the life of the components. Avoid damp and dusty places.
4. Care – From time to time you should wipe off the front and side panels of the cabinet with a soft cloth. Do not use rough material, thinners, alcohol or other chemical solvents or cloths since this may damage the finish or remove the panel lettering.

This device complies with Part 15B of the FCC Rules. Operation is subject to the following two conditions: (1) This device may not cause harmful interference, and (2) this device must accept any interference received, including interference that may cause undesired operation.

Changes or modifications not expressly approved by Russound could void the user's authority to operate this equipment.

TABLE OF CONTENTS

Product Introduction 4-5

Component Guide

ST2-XM2 Front Panel 6
ST2-XM2 Rear Panel 7
ST2-RC Remote Control 8

ST2-XM2 Setup and Connections

Basic Connections 9
CAV6.6 Connections 10
CA Series and ST2-KP Connections 11
Antenna Connections 12

ST2-XM2 Operation

XM Radio Activation 13
XM Radio Displays 13
XM Radio Modes 14-17
Front Panel Controls 18
ST2-RC Remote Control 19
ST2-KP Keypad Control 20
UNO-S2 Keypad Control with RNET Controller 21-22
SRC2 Remote Control with RNET Controller 23-24

ST2-XM2 Tuner Programming

ST2 Chassis Setup Menu 25
- Source Number 25-26
- Update Firmware 26
- Factory Initialization 26
- System Info 26

Tuner Setup Menu for XM 28
- Memory Name 28-29
- Bank Name 30
- Controller ID 30
- Diagnostics 30
- Factory Initialization 30
- System Info 30

Backup and Restore 31

Programming for CAV6.6 Use 32

Programming for CAM6.6 Use 33

Technical Specifications 34

Warranty & Repair 35

INTRODUCTION

DESCRIPTION

Thank you for choosing the Russound ST2-XM2 Dual Smart Tuner. Whether you are adding satellite radio to an existing system, expanding a CA Series system or taking advantage of the CAV6.6 or CAM6.6's robust RNET® communication link, the ST2-XM2 Tuner is designed to meet your needs.

The ST2-XM2 Tuner doubles your satellite radio listening enjoyment with two XM radio modules in one unit. The XM tuner delivers all the diversity and choices available to XM radio subscribers. The two modules share one set of controls and display on the front of the unit, but each runs independently. This arrangement allows two different broadcasts at the same time in a multi-source, multi-room audio distribution system.

XM satellite radio provides over 100 channels of music, news sports, comedy, talk and entertainment. Its coast-to-coast coverage, digital quality sound and many commercial-free music channels make XM radio the choice for the discriminating listener.

XM radio is a subscription-based service, and listeners can subscribe by visiting XM on the web *www.xmradio.com* or by calling XM's Listener Care at 800-967-2346.

In addition to XM satellite access, the ST2-XM2 Tuner can store up to 72 favorites, or *memory presets*. These are stored in groups of six called *banks*. There are six banks for each tuner. Each preset and each bank can be given a custom name of your choice.

The ST2-XM2 Tuner can be controlled from the front panel or by the dedicated ST2-KP tuner keypad. It can also be controlled by the ST2-RC IR remote aimed at the tuner's front panel IR receiver. The ST2-RC IR codes can be learned into any IR learning remote control for easy system integration. It can also be controlled by IR signals received through the IR connections on the rear panel from IR repeating system commonly used in distributed audio systems.

If the ST2-XM2 Tuner is part of an RNET-enabled system such as the CAV6.6 or CAM6.6, the tuner can be controlled through an RNET keypad such as the UNO-S2.

The ST2-XM2 Tuner also has an RS-232 port to support fully bi-directional integration into whole-house control systems such as Crestron® and AMX®.

FEATURES

- Two XM satellite radio modules
- Compact single rack unit chassis
- Six banks of six memory presets each per tuner (72 total presets) for storing XM channels
- Custom names for presets and banks
- Two Favorite presets per tuner
- Dedicated IR remote control
- Individual IR direct inputs for each tuner
- Front panel IR receiver
- Supports two ST2-KP optional tuner keypads
- RNET connections send tuner frequency and control information to UNO keypad display
- RS-232 control and programming

INTRODUCTION

INSTALLATION APPLICATIONS

RNET-enabled System

When the ST2-XM2 Tuner is used with an RNET-enabled device such as the CAV6.6 or CAM6.6, and is connected to it through the Link In or Link Out port, the tuner will be controlled by the CAV6.6 or CAM6.6 through the UNO keypad. Through RNET, tuner information such as Tuner 1 or 2, channel, preset names and XM is displayed on UNO keypads. An additional RNET device can be connected to an existing ST2 by using the Link Out of the first unit into the Link In of the second unit.

Before using the ST2-XM2 tuner with the CAV6.6 or CAM6.6, you must assign source numbers to Tuner 1 and 2 in the ST2 Setup Menu AND complete the CAV6.6 and CAM6.6's Source Setup procedure to identify the tuner as a "Peripheral" command type device.

IR-controlled System

CA Series -

The ST2-XM2 Tuner can be controlled by infrared commands received through either of the two IR connections on the rear panel. There are two unique IR code sets for Tuner 1 and Tuner 2, which allow each to be controlled independently from either IR connection. These codes can be learned from the ST2-RC remote control into the CAS-RC remote control.

The ST2-XM2 contains two individual tuners, which makes it act as two sources in the CA system. There are two source audio outputs and two IR connections - one for each tuner in the ST2-XM2. You will need at least one IR link cable (Russound P/N 09-0508) for these connections.

If you are using an IR-controlled system from another manufacturer, installation should be similar. The ST2-XM2 IR codes may be learned into many other manufacturers' remote controls that have learning capability for unified control over the A-V equipment.

Note: Optional ST2-KP keypads can be used to provide control for the ST2-XM2 Tuner and are designed to be used with IR-controlled systems.

RS-232 Controlled System

The ST2-XM2 Tuner can be controlled using the RNET protocol provided via the RS-232 port on the rear panel. It can also be controlled by any RS-232-enabled control system (e.g., Crestron, AMX). Information on RS-232 operation is available to dealers in the Document Center on the Russound web site, *www.russound.com*.

BOX CONTENTS

The ST2-XM2 Tuner comes with the parts needed to setup and operate the component. These include:

- ST2-XM2 Tuner (two XM modules)
- ST2-RC remote control
- 12VDC power supply
- XM antenna (2)
- RCA audio cable (2)
- Rack mount ears

Please call Russound at 800-638-8055 ext. 501 for assistance if parts are missing.

COMPONENT GUIDE
ST2-XM2 FRONT PANEL

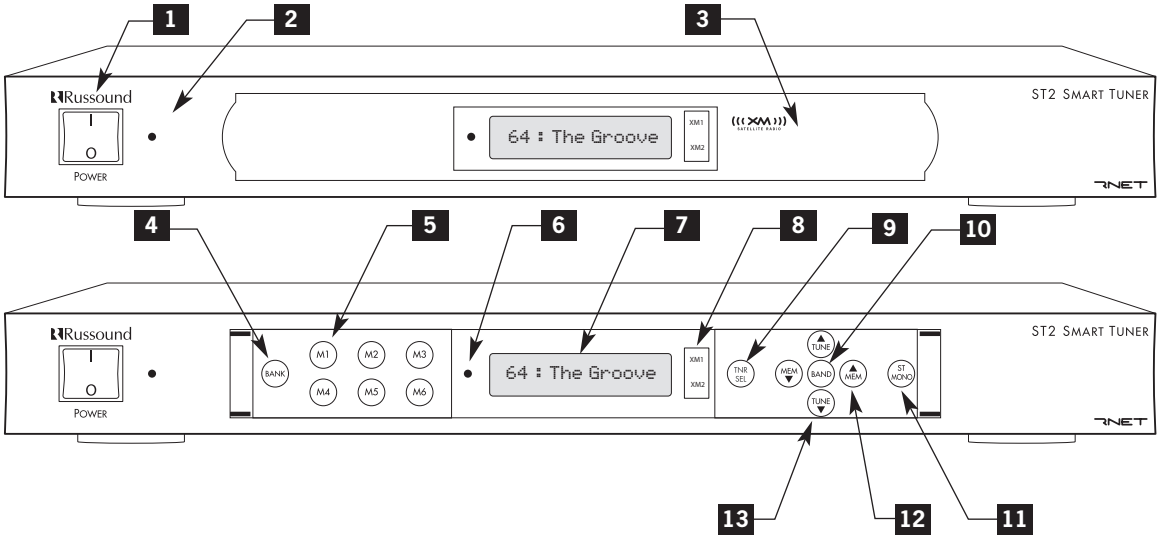

1 MAIN POWER SWITCH - Turns power on and off

2 POWER ON/OFF LED - Indicates power on or off

3 REMOVABLE COVER LENS - Covers the selection buttons on the tuner

4 BANK SELECT BUTTON - Selects bank 1-6

5 MEMORY SELECT BUTTONS - Sets and selects memory presets 1-6 for each bank

6 IR RECEIVER - Receives IR signal from remote control

7 LCD PANEL - 12-character backlit display shows station, channel, custom names, etc.

8 XM1 and XM2 - Backlit XM tuner selection indicator

9 TNR SEL - Selects Tuner 1 (XM1) or Tuner 2 (XM2), and accesses tuner setup menus

10 BAND - Selects an XM Mode (Category Search, Now Playing, Display Preferences)
Enters menu selections when programming

11 ST/MONO - Press to Exit current XM Mode, hold for signal strength

12 MEM PRESET UP/DOWN - Selects memory presets starting with last preset
Toggles through menu features

13 TUNE UP/DOWN - Manually selects channels (Channel Up/Channel Down)
Toggles through menu settings

COMPONENT GUIDE
ST2-XM2 REAR PANEL

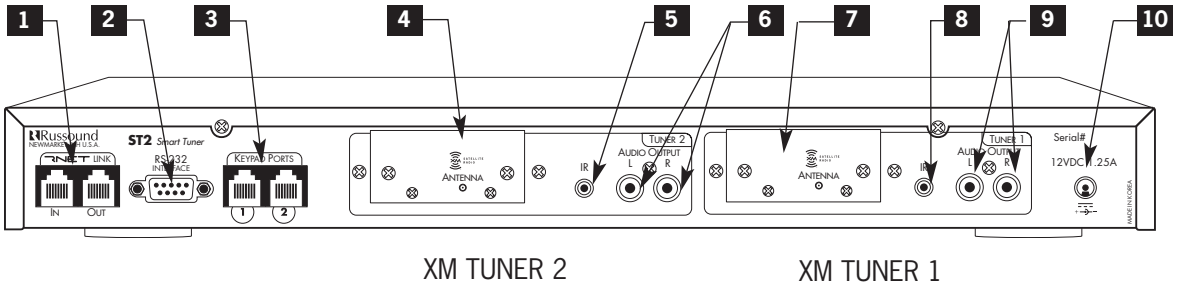

XM TUNER 2 XM TUNER 1

1 RNET LINK IN/LINK OUT - Links to other Russound components that are RNET compatible, displays frequency and other information on the UNO keypads

2 RS-232 INTERFACE - The RS-232 Interface allows the tuner to be controlled by PC or other devices that have an RS-232 Interface. The RS-232 Interface also allows for firmware updates and programming (DB9 Cable)

3 KEYPAD PORTS - RJ-45 Keypad ports for ST2-KP tuner keypads in dedicated, non-RNET systems (Do not connect UNO keypads to these ports)

4 XM ANTENNA - XM Antenna SMB connection (50 ohms) for Tuner 2

5 IR INPUT - IR control input (common IR control) for Tuner 2 or Tuner 1

6 AUDIO OUTPUT - Line-level audio signal outputs (RCA Cable) for Tuner 2

7 XM ANTENNA - XM Antenna SMB connection (50 ohms) for Tuner 1

8 IR INPUT - IR control input (common IR control) for Tuner 1 or Tuner 2

9 AUDIO OUTPUT - Line-level audio signal outputs (RCA Cable) for Tuner 1

10 POWER SUPPLY - 12VDC external power supply connection

COMPONENT GUIDE
ST2-RC REMOTE CONTROL

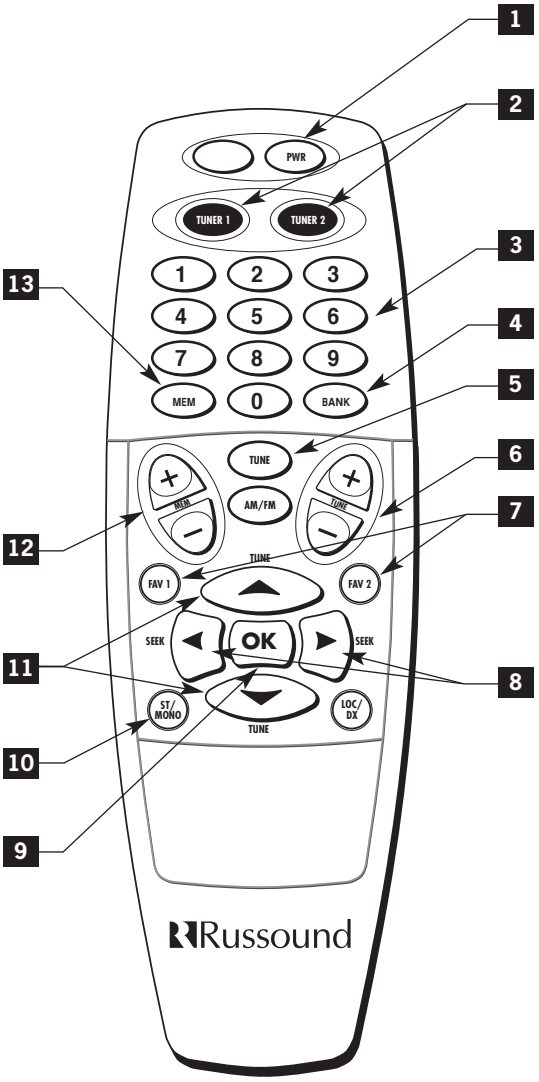

1. POWER - Puts the tuner in/out of standby mode
2. TUNER CONTROL - Select TUNER 1 (XM1) or TUNER 2 (XM2) and all subsequent button presses affect that tuner
3. NUMERIC INPUT - Number buttons for direct selection of channel, bank, preset
4. BANK SELECT - Used for direct bank selection (numeric input 1-6)
5. TUNE SELECT - Used for direct channel selection (numeric input)
6. TUNE UP/DOWN - Incrementally scrolls through channel numbers
7. FAV 1/FAV 2 - Sets/Selects Favorite 1 or 2 preset selection on ST2-XM2 tuner
8. SEEK UP/DOWN - Scrolls through banks 1-6
9. OK - Operating mode toggle
10. STEREO/MONO - Exit current XM operating mode
11. TUNE UP/DOWN - Scrolls through channel numbers
12. MEM UP/DOWN - Scrolls through preset stations within selected bank
13. MEM SELECT - Used for direct memory select (numeric input 1-6)

Power

To power the tuner, connect the 12VDC external power supply by inserting the power supply jack into the power supply connection on the tuner's rear panel.

Audio Output

Connect one end of a dual RCA audio cable to the Tuner 1 Audio Output connection. Keep proper channel identity. Attach the other end of the RCA cable to the source input of the audio control system. Repeat the same procedure for the Tuner 2 Audio Output.

IR Connections

The ST2-XM2 Tuner can be controlled by infrared commands received through the two IR connections on the rear panel. The ST2-XM2 Tuner component contains two tuners, which must be set up as two sources. There are two IR connections - one for each tuner in the ST2-XM2. You will need two IR link cables (Russound P/N 09-0508) for these connections. There is a unique IR code set each for Tuner 1 and Tuner 2, which allow each to be controlled independently. These codes can be learned from the ST2-RC remote into learning-capable remote controls and keypads.

If you are using an IR-controlled system from another manufacturer, installation should be similar. The ST2-XM2 IR codes may be learned into many other manufacturers' remote controls that have learning capability for unified control over the A-V equipment.

RNET Connection

To link the ST2-XM2 to an RNET-compatible device, use a CAT-5 passthrough patch cable with similar wiring terminations at each end. Connect one end of the cable to the RNET Link In of the ST2 tuner, and connect the other end of the patch cable to the RNET Link Out connection on the RNET-compatible device.

ST2-KP RJ-45 Connection Wiring

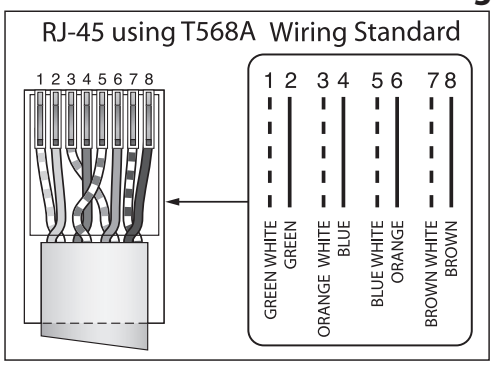

ST2-KP Keypad to ST2-XM2 Connection (Non-RNET System)

The ST2-KP connects to the ST2-XM2 tuner with CAT-5 cable, using an RJ-45 (T568A) jack on the tuner connection end of the cable. Be sure to use the keypad ports for the ST2-KP and NOT the RNET link ports. The ST2-XM2 tuner supports up to two ST2-KP keypads. An SA-ZX3 Keypad Splitter can be used to add additional keypads.

Note: *ST2-KP keypads are designed for use with IR-controlled systems (non-RNET systems). When the ST2-XM2 Tuner is a component of an RNET system such as CAV6.6, the RNET-system keypads are used.*

Rack Mount Installation

The ST2-XM2 can be mounted in a standard component rack using the rack ears provided. Line the rack ear's two rows of screw holes with the three screw holes on the side of the tuner. Use the screws provided to secure the rack ears onto the unit on both sides. The ST2-XM2 tuner should not be installed above a high heat-producing component such as a power amplifier.

ST2-XM2 SETUP AND CONNECTIONS
CAV6.6 CONNECTIONS

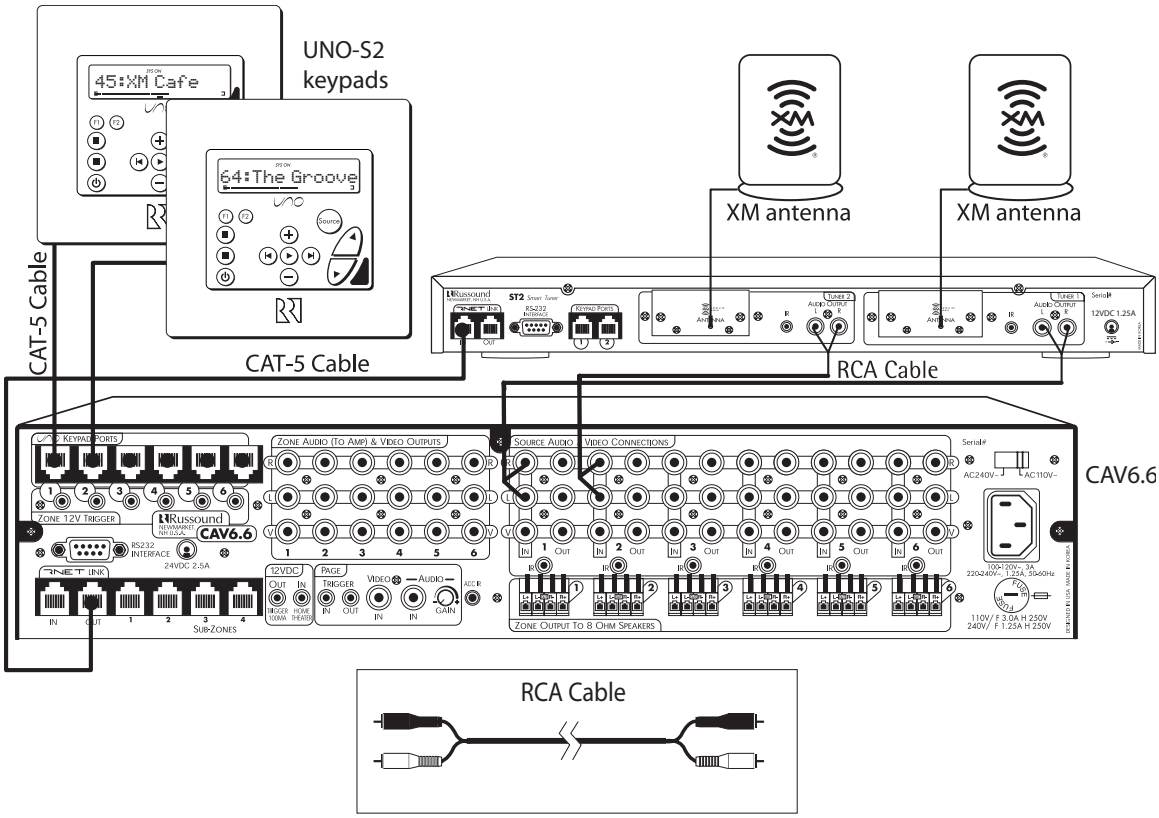

Source Connections with CAV6.6 Controller/Amplifier (RNET System)

The diagram depicts a typical setup using the ST2-XM2 Tuner with a CAV6.6 amplifier. Each tuner in the ST2 unit must be connected as a separate source for audio inputs. UNO-S2 keypads are connected to the CAV6.6 keypad ports, NOT the ports on the ST2 Tuner.

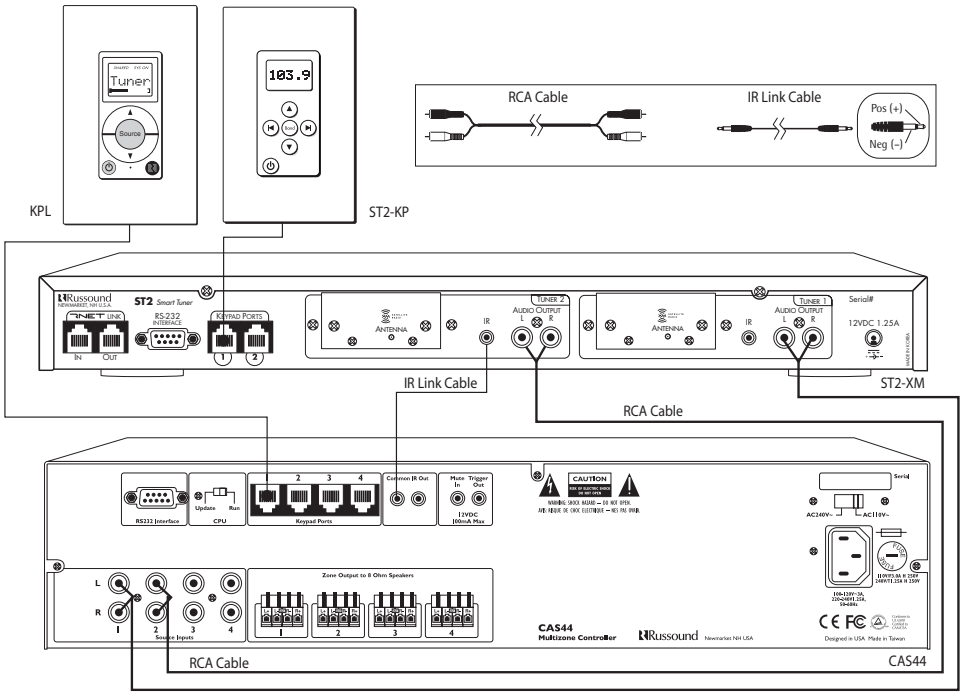

Source Connections with CA Series Controller/Amplifier

The diagram depicts a typical setup using the ST2-XM2 Tuner with a CAS44 controller amplifier. Each tuner in the ST2 unit must be connected as a separate source for audio inputs.

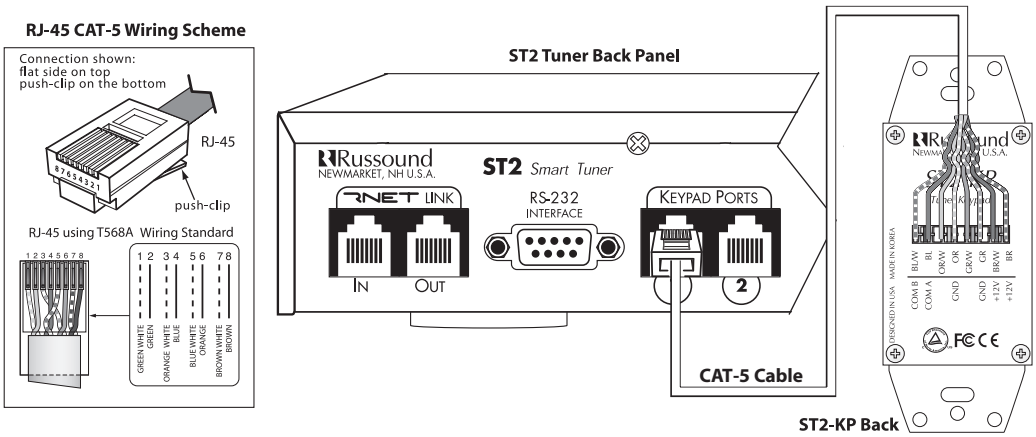

ST2-KP Connections to ST2-XM2 Tuner (Non-RNET Systems)

The diagram depicts a standard ST2-KP keypad connection to the keypad port on the back of the ST2-XM2. The keypad uses a 110 punchdown connection and an RJ-45 T568A connection to the tuner.

ST2-XM2 SETUP AND CONNECTIONS
ANTENNA CONNECTIONS

XM Antenna

Connect the included XM antenna for XM reception to the back panel of the XM module. The antenna comes with 20 feet of cable. If this length is not sufficient, there are aftermarket antenna kits available for custom lengths. Position the antenna near a south-facing window to receive the best signal from a satellite or terrestrial signal.

The antenna may also be attached to an external wall by sliding the slots on the back of the antenna onto four screws mounted on an exterior wall. Establish the best receiving position for the antenna before attaching it to the wall.

XM Signal Strength Mode

To test the XM reception, turn the unit on. When the XM radio is powered for the first time, the XM service will start playing XM Channel 1, a preview/promotional channel. Verify that Channel 1 is playing by pressing the Tune Up/Tune Down buttons. Enter Signal Strength Mode by pressing and holding the ST/MONO button on the ST2-XM2 front panel. The display shows one of the following:

GOOD SIGNAL	Signal strength good
MARGINAL SIG	Signal strength marginal
POOR SIGNAL	Signal strength poor
NO SIGNAL	Loss of signal

Adjust the antenna until GOOD SIGNAL is displayed. Press ST/MONO to exit Signal Strength Mode.

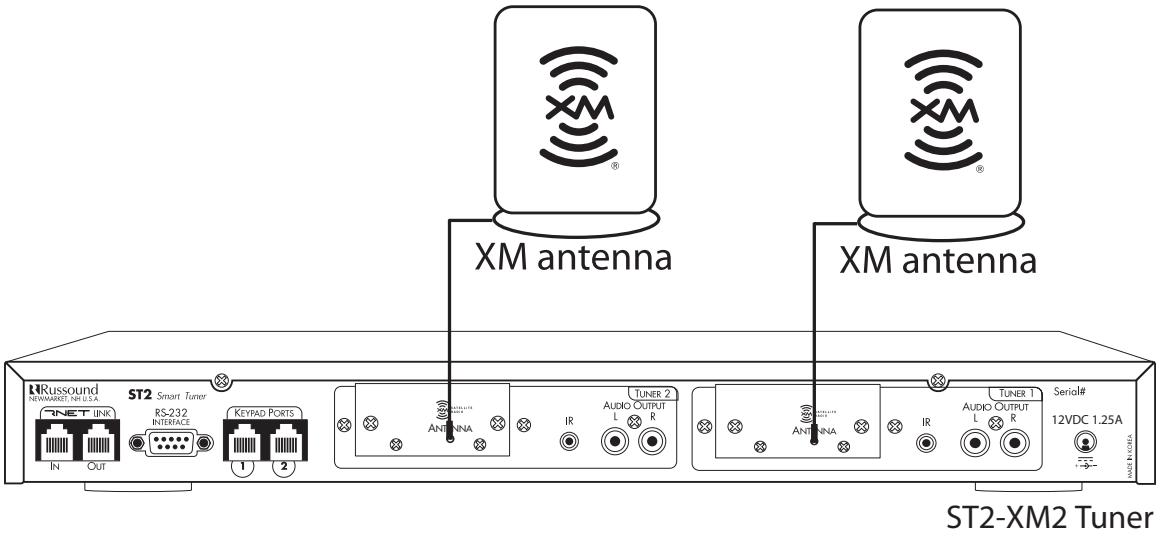

XM Radio Activation

XM Radio is over 100 channels of radio broadcasts with the signal delivered by satellite and (depending on location) transferred by terrestrial antennas. The radio is a subscription-based service with a monthly provider fee and an activation charge. XM radio broadcasts several channels for preview but will not broadcast the full range of channels without activation. Activation and billing are handled solely through XM Radio.

To activate the XM tuner:

1 Turn on the power, select the XM Tuner, and select channel 0. The tuner's eight-character XM satellite Radio ID number will appear on the display. Write the number down to have it available when contacting XM Radio for activation. The number is also shown on the back of the unit and on the product box. Both XM tuners must be activated.

2. To subscribe, have a major credit card and your XM Radio ID number at hand and contact XM at http://www.xmradio.com/activation. You can also activate service by calling XM Radio at 1-800-967-2346. You will be guided through the activation process step by step.

3. A complete and up-to-date full channel listing is available on the XM Radio website, www.xmradio.com.

XM Radio Displays

In addition to Channel and Category information, the XM tuner will broadcast operating condition messages when the following conditions occur:

Display	Condition
ANTENNA	Antenna not connected
UPDATING	Updating encryption code
LOADING	Acquiring channel audio or information
OFF AIR	Channel not in service
CH ---	Channel (SID) no longer available
------	Corresponding Artist Name or Song Title are null (empty)
------	No channel available for the chosen category

ST2-XM2 OPERATION
XM RADIO MODES

XM Radio Modes

There are four user "modes" for selecting music and viewing music information on the XM Tuner:

Preset (default or normal)
Category Search
Now Playing
Display Preferences.

These modes are accessed through certain button and key presses from the tuner panel, remote controls and keypads. When choosing modes, if no choice is made after 20 seconds, the tuner will time out by showing EXIT and return to tuner display and Preset mode.

For all XM Modes

The chart below outlines the button presses for various XM tuner functions outside of the XM modes.

	ST2-XM	ST2-RC	ST2-KP	UNO-S2	SRC2
All User Modes					
Operating Mode Toggle	BAND	OK	Band	▶	OK ▶ Menu
Exit Current Mode	ST MONO	ST/ MONO	Band	■	■
Signal Strength	ST MONO Hold			■ Hold	■ Hold

Operating Mode Toggle
This button press accesses the three non-default XM modes. The three modes will appear in order: Category Search, Now Playing and Display Preferences.

Exit Current Mode
This button press returns the XM tuner to Preset (default) mode.

Signal Strength
This button press and hold accesses the Signal Strength mode. Depending on the signal, the following will be displayed:

GOOD SIGNAL Signal strength good
MARGINAL SIG Signal strength marginal
POOR SIGNAL Signal strength poor
NO SIGNAL Loss of signal

Press the appropriate button again to exit Signal Strength Mode.

Preset (default) Mode

This is the normal operating mode of the XM tuner. In this mode the XM tuner operates similarly to an AM/FM tuner for channel up and down, bank selection and memory presets.

Next Preset
This button press accesses the next saved preset (6 presets for each bank) in the chosen bank.

Previous Preset
This button press accesses the previous saved preset in the chosen bank

Next Bank
This button press accesses the next bank (total of 6 banks).

Previous Bank
This button press accesses the previous bank.

Channel Up
This button press accesses the next active channel up from the current channel.

Channel Down
This button press accesses the next active channel down from the current channel.

	ST2-XM	ST2-RC	ST2-KP	UNO-S2	UNO-S1	SRC2
Preset Mode						
Next Preset	MEM					
Previous Preset	MEM					
Next Bank	BANK		Hold	Hold		Hold
Previous Bank			Hold	Hold		Hold
Channel Up	TUNE				Hold	CH
Channel Down	TUNE				Hold	CH

Category Search Mode (1.CAT SEARCH)

XM Radio is organized by Channel Category (e.g., Rock, Country, News). Within each category is a series of channels (e.g., Top Tracks, Bluegrass Junction, XM Classics). Channel selection in this mode is refined to scrolling only those channels in the selected category.

Next Category
This button press accesses the next category from the current category.

Previous Category
This button press accesses the previous category from the current category.

Category Channel Up
This button press accesses the next channel up within the selected category.

Category Channel Down
This button press accesses the next channel down within the selected category.

	ST2-XM	ST2-RC	ST2-KP	UNO-S2	UNO-S1	SRC2
Category Search Mode	BAND	OK	Band	▶		Guide
Next Category	▲ MEM	+ MEM ▶	▶|	▶|	▶|	▶ ▶
Previous Category	MEM ▼	MEM − ◀	|◀	|◀	|◀	◀ ◀
Category Channel Up	▲ TUNE	▲ + TUNE	▲	+	▶| Hold	▲ + CH
Category Channel Down	TUNE ▼	▼ TUNE −	▼	−	|◀ Hold	▼ CH −

Now Playing Mode (2.NOW PLAYNG)

This mode displays information about the current XM selection. Appropriate button presses access the next or previous information item.

NAME:
Displays the artist's name, feature name or program name (news, talk, sports).

TITLE:
Displays the song title or program title.

CATEGORY:
Displays the current category.

	ST2-XM	ST2-RC	ST2-KP	UNO-S2	UNO-S1	SRC2
Now Playing Mode	BAND	OK	Band	▶		Info
Next Info Item	▲MEM ▲TUNE	+MEM +TUNE ▶ ▲	▶| ▲	▶| +	▶|	▶▶ ▶
Previous Info Item	MEM▼ TUNE▼	−MEM −TUNE ◀ ▼	|◀ ▼	|◀ −	|◀	◀◀ ◀

Display Preference Mode (3.DSPLY PREF)

This mode allows you to choose how XM channel information will be displayed on the keypad and tuner. Appropriate button presses access the next or previous preference item.
Note: For any display configuration, the artist's name and song title will scroll before the display returns to the designated display format.

Channel Number (CH NUMBER:)

This selection displays the channel number only (e.g., XM070, XM103).

Channel Name (CH NAME:)

This selection displays the channel name only (e.g., ESPN Radio, Real Jazz).

Channel Number and Name (#:CH NAME:)

This selection displays the channel number and name (e.g., 64:The Groove, 121:Fox News).

	ST2-XM	ST2-RC	ST2-KP	UNO-S2	UNO-S1	SRC2
Display Preference Mode	BAND	OK	Band	▶		OK ▶
Next Display Preference	▲MEM ▲TUNE	+MEM +TUNE ▶ ▲	▶| ▲	▶| +	▶|	▶▶ ▶
Previous Display Preference	MEM▼ TUNE▼	−MEM −TUNE ◀ ▼	|◀ ▼	|◀ −	|◀	◀◀ ◀

ST2-XM2 OPERATION
FRONT PANEL CONTROLS

Front Panel Operation

Turning the unit on

To turn the unit on, push the On/Off button up on the front panel. Pushing the On/Off button down turns the tuner off.

Selecting the desired tuner

From the front panel, use (TNR SEL) to toggle between the XM tuners. A backlight shows behind the selected label XM1 (green) or XM2 (amber) to indicate the active tuner. In addition, the LCD panel is also backlit green for Tuner 1 and amber for Tuner 2. Each time a tuner is selected the display will refresh with the current station or preset, and all subsequent memory preset entries will be associated with that selected tuner.

Selecting an XM mode

Push (BAND) to select an XM operating mode.

Exiting an XM mode

Push (ST MONO) to exit the XM mode selection menu.

Signal Strength mode

Press and hold (ST MONO) and release. The display shows the signal strength rating. To exit press (ST MONO).

Selecting the desired channel

Press and release (▲ TUNE) and (TUNE ▼) for manual tuning.

Bank/Memory Presets

Each tuner has six banks of preset memory settings, and each bank holds six presets for a total of 36 possible presets for each tuner (72 total presets). Presets are associated with the tuner that is selected at the time the preset is saved.

Memory Preset programming

From the front panel, perform these steps:

1. Select a tuner using (TNR SEL).

2. Use (BANK) to choose from one of six banks (1-6).

3. Tune to the desired channel.

4. Push the desired memory preset (M1 through M6) button for more than 2 seconds. When the memory preset is saved, the appropriate preset number (M1 through M6) and SAVED appears on the LCD. The selected station setting reappears and the sound resumes after the button is released.

Recalling a Memory Preset

To recall a memory preset, use (BANK) to select the desired bank, then press the desired preset button (M1 to M6). In addition to direct selection, the memory presets can be accessed by using (▲ MEM) and (MEM ▼) to scroll through all presets for the bank selected.

Backup and Restore

Once all of the tuner settings are completed, it may be advisable to create a backup of the programmed settings for future use. The backup will then be available in case tuner settings need to be restored. The "RNET Backup Utility" is available through the Document Center at www.russound.com. Also required are a DB9 male-to-female cable and laptop or desktop PC.

ST2-RC Remote Control Operation

The ST2-RC remote control is the only means of remote operation of the ST2-XM2 in a non–RNET system. The ST2-XM2 front panel displays information for the tuner that is receiving commands from the ST2-RC. However, the ST2-RC commands do not change which tuner is playing; that is done through the system's source selection.

Turning the unit on/off

To switch the ST2 tuner in or out of standby mode, push PWR or any other button except TUNER 1 or TUNER 2.

Selecting the desired tuner

To control a tuner, push TUNER 1 or TUNER 2. When pressed, these buttons will be backlit green for Tuner 1 (XM1) and amber for Tuner 2 (XM2). Each time a tuner is selected the display will refresh with the current station or preset for that tuner, *and all subsequent button presses and memory preset entries will be associated with that selected tuner.*

Selecting the desired channel

Use + and − for manual tuning. To move quickly through the channels, press and hold either of the Tune buttons for more than 1.5 seconds.

To directly select a channel, press TUNE, and enter the two- or three-digit XM channel number.

Selecting an XM mode

Push OK to select an XM operating mode.

Exiting an XM mode

Push ST/MONO to exit the XM operating mode selection menu.

Recalling a Memory Preset

To recall a memory preset, select the desired tuner, press BANK and enter the desired bank number (1-6), then press MEM and enter the desired preset number (1 to 6). The memory presets can also be accessed by using + and − to scroll through all presets for the selected bank.

Saving Favorites

The remote control stores two "favorites" (similar to memory presets) per tuner. These are set simply by selecting either Tuner 1 or Tuner 2, setting the desired frequency and pressing and holding FAV 1 or FAV 2 until "FAV1 (2) saved" appears on the tuner. Stored Favorites are then recalled by pressing either FAV 1 or FAV 2.

ST2-XM2 OPERATION
ST2-KP KEYPAD CONTROL

ST2-KP Keypad Operation

1 Turning the keypad on/off

To activate the ST2-KP, press ⏻. Press ⏻ to power down the keypad display. The keypad remains powered until the ST2-XM2 Tuner is turned off.

1 Selecting the desired tuner

To select a different tuner, press and hold ⏻. (If the keypad has been hardware jumper-selected to Tuner 1 or Tuner 2, it will not switch between the two tuners.) The backlight color of the display will be green for Tuner 1 (XM1) and amber for Tuner 2 (XM2). Each time a tuner is selected the display will refresh with the current station or preset for that tuner, and *all subsequent button presses and memory preset entries will be associated with that selected tuner.*

2 Selecting an XM mode

Push Band to select an XM operating mode.

2 Exiting an XM mode

Press and release Band until EXIT is displayed to exit the XM operating mode menu.

3 Selecting the desired channel

Use ▲ and ▼ for manual tuning. To move quickly through the channels, press and hold either ▲ or ▼ for more than 1.5 seconds.

4 Selecting a Bank

To select a bank, select the desired tuner, then press and hold ⏮ or ⏭ to select the desired bank. The bank name will show on the display.

4 Recalling a Memory Preset

To recall a memory preset, press and release ⏮ or ⏭ to scroll through the presets for the selected bank. (Memory presets must be stored for ST2-KP recall)

5 ST2-KP Keypad Display

The 5-character backlit display shows XM channel and mode information. Messages scroll twice, then display the first 5 characters.

ST2-KP Keypad-Front Panel

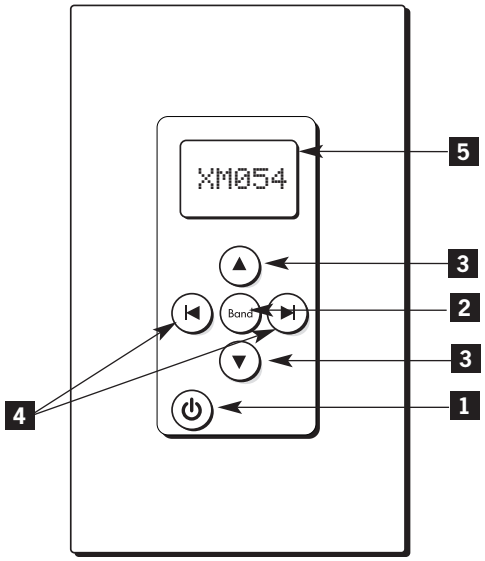

UNO-S2 Keypad Operation

NOTE: *To control the ST2 Tuner through the UNO-S2 keypad, the tuner must be configured as a source using the controller's programming steps.*

Turning the unit on

The tuner is power managed by the RNET-enabled controller. If the tuner is in standby mode, any button press of the UNO-S2 keypad will bring the tuner out of standby mode.

Selecting the desired tuner

On the UNO-S2 keypad, press Source to select either Tuner 1 (XM1) or Tuner 2 (XM2) by choosing the source name/number associated with Tuner 1 or 2.

Selecting an XM Mode

Push ▶ to toggle between XM modes.

Exiting an XM Mode

Press and release ■ until EXIT is displayed to exit XM mode selection menu.

Selecting the desired channel

Use ⊕ and ⊖ for manual channel selection. The channel will appear on the keypad and the active tuner. To move quickly through the channels, press and hold either ⊕ or ⊖ for more than 1.5 seconds.

Signal Strength Mode (XM)

To check XM signal strength, press and hold ■ then release. The display shows the signal strength rating. To exit, press ■ again.

Selecting a Bank

To select a bank, press and hold ⏭ for bank up or ⏮ for bank down. The bank's name will be temporarily displayed on the UNO-S2.

Recalling a Memory Preset

Press ⏮ and ⏭ to scroll through the memory presets for the selected bank. This procedure will step through all of the presets in the current bank, then loop back to start at the first one. Only configured presets will be displayed.

Mute

Press ⏸ to mute/unmute the tuner audio output.

ST2-XM2 OPERATION
UNO-S2 KEYPAD CONTROL WITH RNET CONTROLLER

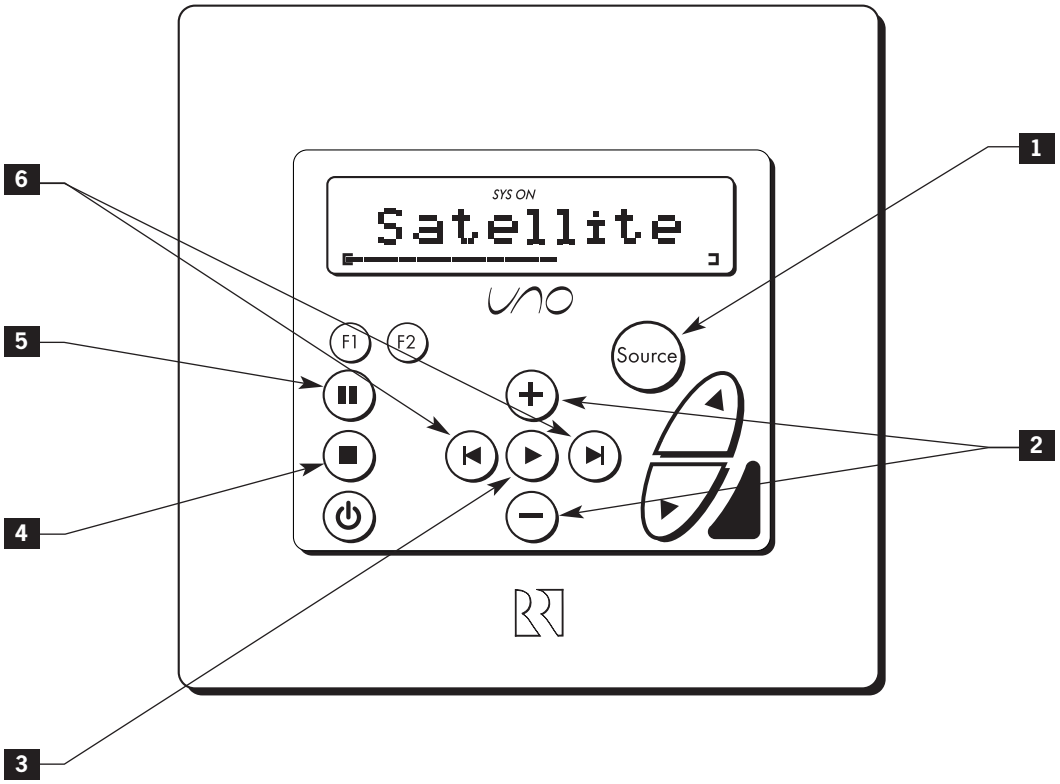

1 TUNER SELECTION - Select source name/number associated with TUNER 1 (XM1) or TUNER 2 (XM2)

2 TUNE UP/DOWN - Used for manual channel selection

3 SELECT - XM Operating mode toggle

4 SEEK - (press) Exit current XM mode

4 SCAN - (press and hold) XM Signal Strength mode toggle

5 MUTE - Mutes/unmutes tuner audio output

6 BANK SELECT - Used for bank selection (press and hold)

6 MEM UP/DOWN - Scrolls through memory preset stations (press)

NOTE: *UNO-S2 keypads are connected to the controller to control the ST2-XM2 through RNET. UNO-S2 keypads do not connect directly to the ST2 Tuner.*

SRC2 Remote Control Operation

Turning the unit on

The tuner is power managed by the CAV6.6 or other RNET-enabled controller. If the tuner is in standby mode, any button press of the SRC2 will bring the tuner out of standby mode when used with the UNO keypad.

Selecting the desired tuner

To select a tuner, push Input and choose the source name/number associated with Tuner 1 (XM1) or Tuner 2 (XM2), or use the numeric source inputs at the bottom of the SRC2.

Selecting an XM Mode

Push OK , Menu, or ▶ to toggle between XM operating modes.

Exiting an XM Mode

Press ■ to exit XM operating mode menu.

Signal Strength mode

Press and hold ■ and release. The display shows the signal strength rating. To exit press ■ .

Selecting the desired channel

Use the Channel + CH and CH − or ▲ and ▼ for manual tuning. To move quickly through the channels, press and hold the button for more than 1.5 seconds. To directly select a channel, enter the three- or four-digit channel number.

Selecting a Bank

To select a bank, press and hold ▶▶ for bank up or ◀◀ for bank down.

Recalling a Memory Preset

Press ◀ and ▶ to scroll through a loop of all the memory presets for the currently selected bank. Only configured presets will be displayed.

Mute

Press the ❚❚ button to mute/unmute the tuner audio output.

ST2-XM2 OPERATION
SRC2 REMOTE CONTROL WITH RNET CONTROLLER

RUSSOUND SELECTION - "R" must be the selected source for control of the controller and any connected components. Select "R" before sending SRC2 remote commands.

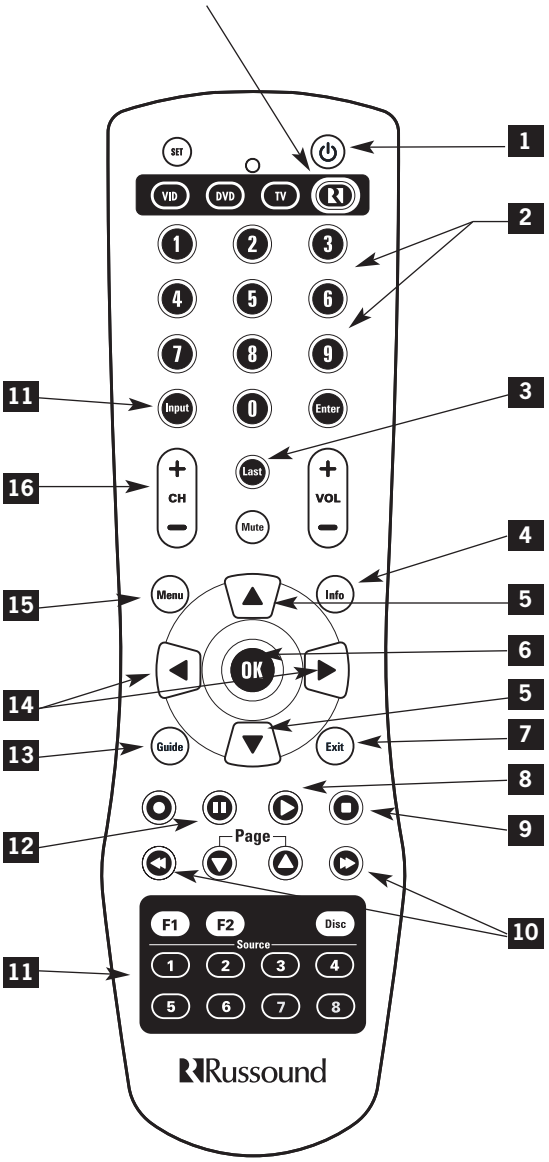

1 POWER - Powers off zone

2 NUMERIC INPUT - Number buttons for direct input of channel (press). Memory preset save (press and hold)

3 LAST - Recalls last XM channel selected

4 INFO - XM Now Playing mode toggle

5 TUNE UP/DOWN - Incrementally scrolls through channels

6 OK - XM Operating mode toggle

7 EXIT - Exit XM Operating mode

8 PLAY - XM Operating mode toggle

9 STOP - Exit XM Operating mode

10 MEM UP/DOWN - Scrolls through memory presets for selected bank (press)

10 BANK UP/DOWN - Used for bank selection (press and hold)

11 TUNER SELECTION - Select XM Tuner by its associated source name/number

12 PAUSE - Mutes/unmutes tuner audio output

13 GUIDE - XM Category Search mode toggle

14 SEEK UP/DOWN - Next/previous preset, category, info item, display preference

15 MENU - XM Operating mode toggle

16 TUNE UP/DOWN - Incrementally scrolls through channels

ST2-XM2 TUNER PROGRAMMING
ST2 TUNER SETUP MENU

ST2-XM2 Tuner Setup Menus

Note: *The Setup Menu procedures must be performed from the ST2-XM2 Tuner front panel.*

The ST2-XM2 Tuner Setup Menus provide setup and naming procedures for the ST2-XM2 main chassis and the XM tuner modules. These procedures include source number assignments, assigning a custom name to a memory preset or a bank, factory initialization and system information.

If the ST2-XM2 is used with a **non-RNET** system, the ST2-XM2 can be connected and operated without any setup programming. Follow the setup menus if custom names are desired, or for system info.

If the ST2-XM2 is used with an **RNET system** such as **CAV6.6** or **CAM6.6**, the following minimum setup must be performed for the ST2-XM2 to be properly controlled by the CAV6.6 and CAM6.6.

1. ST2 Chassis Setup Menu - Assign source numbers to Tuner 1 and Tuner 2.

2. CAV6.6/CAM6.6 Source Setup Menu - Configure the source numbers assigned in step 1 for Tuners 1 and 2, and assign command type PERIPHERAL.

NOTE: *Once the programming procedures are completed, cycle power first to the Tuner and then to the CAV6.6/CAM6.6 (must be powered on last) to establish a connection.*

ST2 Chassis Setup Menu
Source Number (Chassis)

The Source Number procedure permits Tuner 1 (XM1) and Tuner 2 (XM2) to be assigned the proper source numbers to be used in an RNET system.

Note: *The source number must be assigned as PERIPHERAL in the RNET controllers.*

Note: *Each of the ST2-XM2 modules can be configured as source number "unassigned" if the module is used in another system (e.g., home theater) or will not be used as a source in the RNET system.*

1. Enter the Setup Menu by pressing and holding the TNR SEL button.
2. TUNER SETUP appears. Press MEM Up/Down until SOURCE NUM appears on the tuner.
3. Press BAND. TUNER # appears.
4. Press the Tune Up/Down buttons to select the Tuner # (Tuner 1 is XM1, Tuner 2 is XM2).
5. Press BAND. SOURCE NUM appears.
6. Press the Tune Up/Down buttons to scroll through the source numbers 1-6.
7. Press BAND to select the source number.
8. Repeat the process for the next tuner.
9. Press TNR SEL to exit the Source Number menu.

(continued)

ST2-XM2 TUNER PROGRAMMING
ST2 TUNER SETUP MENU

Update Firmware (Chassis)
The Update Firmware procedure allows the ST2 tuner's OS firmware to be updated. The procedure is performed using a DB9 serial cable with one end connected to the RS-232 port on the back of the tuner and the other connected to a PC or laptop. If an OS firmware update is available, it can be obtained through the Document Center at www.russound.com. XM tuner module firmware update must be performed by an authorized Russound service facility.

1. Enter the Setup Menu by pressing and holding the TNR SEL button.
2. TUNER SETUP appears. Press MEM Up/Down until UPDATE FIRMW appears on the tuner.
3. Press BAND to enter the UPDATE FIRMW menu.
4. "Hold BAND" appears on the tuner.
5. While pressing and holding BAND, "After update cycle power" appears on the tuner display.
6. When "Start Update" appears on the tuner display, start the update program. "Finished" will then appear in firmware's update window on the PC.
7. Cycle power to the tuner.

Factory Initialization (Chassis)
The Factory Initialization procedure allows the erasure of all programmed settings and returns them to the factory default settings.
1. Enter the Setup Menu by pressing and holding the TNR SEL button.
2. TUNER SETUP appears. Press MEM Up/Down until FACTORY INIT appears on the tuner.
3. Press BAND to enter the FACTORY INIT menu.
4. "Are you sure" appears on the tuner. Using the Tune Up/Down buttons, view the "Yes" and "No" selections.
5. Press BAND to select. A "No" selection returns to the top of the Factory Init menu. A "Yes" begins the initialization.
6. "Please wait" appears on the tuner during the process and "Cycle Power" appears when complete.
7. Cycle power on the ST2-XM2 tuner.

System Info (Chassis)
The System Info menu shows the ST2 Tuner's manufacturing build properties.

1. Enter the Setup Menu by pressing and holding the TNR SEL button.
2. TUNER SETUP appears. Press MEM Up/Down until SYSTEM INFO appears on the tuner.
3. Press BAND.
4. Press BAND at "Build Time" to view.
5. Press MEM Up/Down to advance.
6. Press BAND at "Build Date" to view.
7. Press MEM Up/Down to advance.
8. Press BAND at "Version" to view.
9. Press TNR SEL to exit the System Info menu.

(END OF ST2 CHASSIS SETUP)

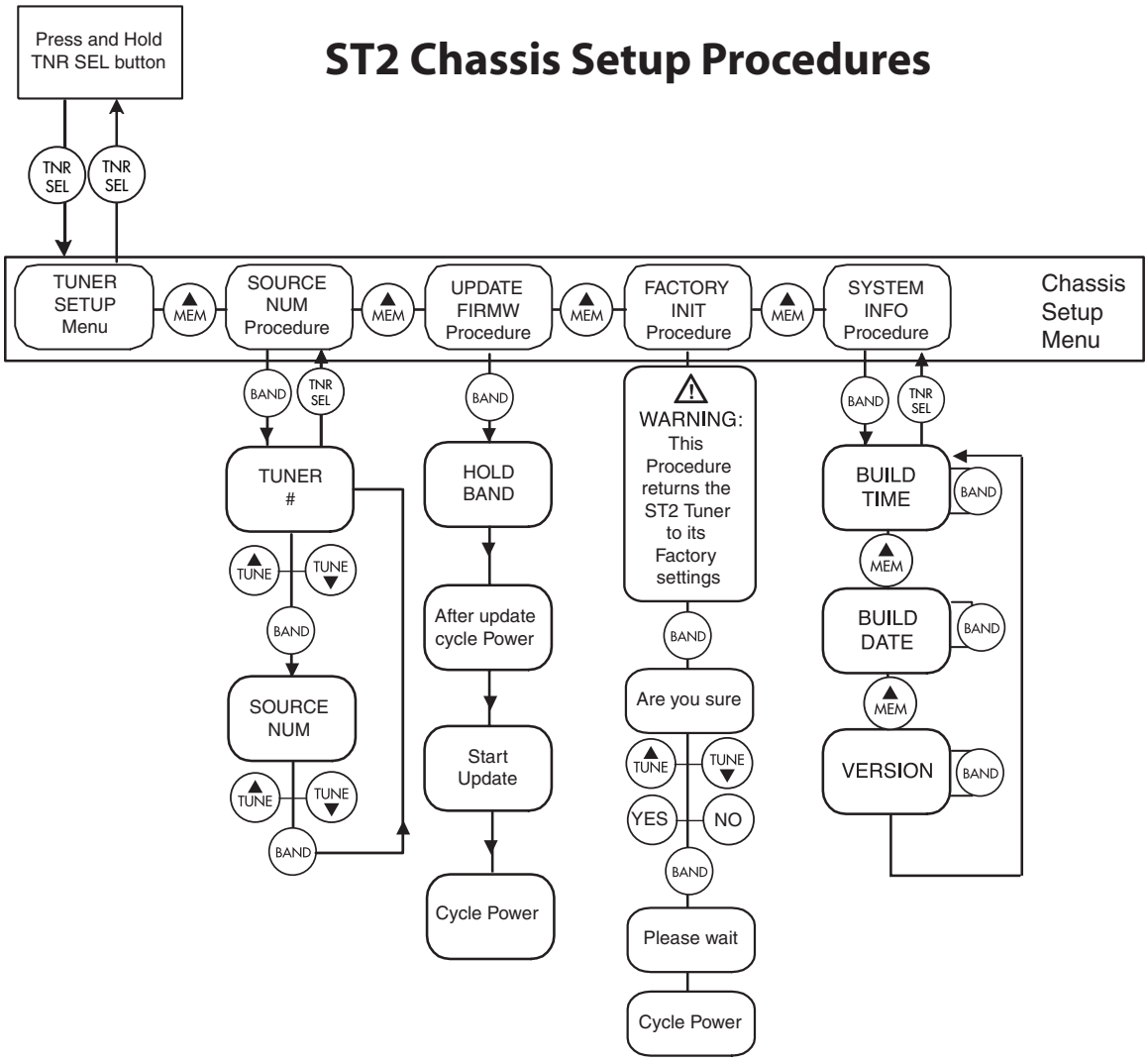
ST2 Chassis Setup Procedures
Press and Hold TNR SEL button
TNR SEL
TNR SEL
TUNER SETUP Menu
MEM
SOURCE NUM Procedure
MEM
UPDATE FIRMW Procedure
MEM
FACTORY INIT Procedure
MEM
SYSTEM INFO Procedure
Chassis Setup Menu
BAND
TNR SEL
TUNER #
TUNE
TUNE
BAND
SOURCE NUM
TUNE
TUNE
BAND
BAND
HOLD BAND
After update cycle Power
Start Update
Cycle Power
WARNING: This Procedure returns the ST2 Tuner to its Factory settings
BAND
Are you sure
TUNE
TUNE
YES
NO
BAND
Please wait
Cycle Power
BAND
TNR SEL
BUILD TIME
BAND
MEM
BUILD DATE
BAND
MEM
VERSION
BAND

ST2-XM2 TUNER PROGRAMMING
ST2 TUNER SETUP MENU

Tuner Setup Menu for XM

Memory Name

A memory preset *must* be created and saved before it can be named (see page 18). Once it is saved, the preset's Tuner #, Bank # and Memory # must be entered in the following procedure.

1. Enter the Setup Menu by pressing and holding the TNR SEL button.
2. TUNER SETUP appears. Press BAND again.

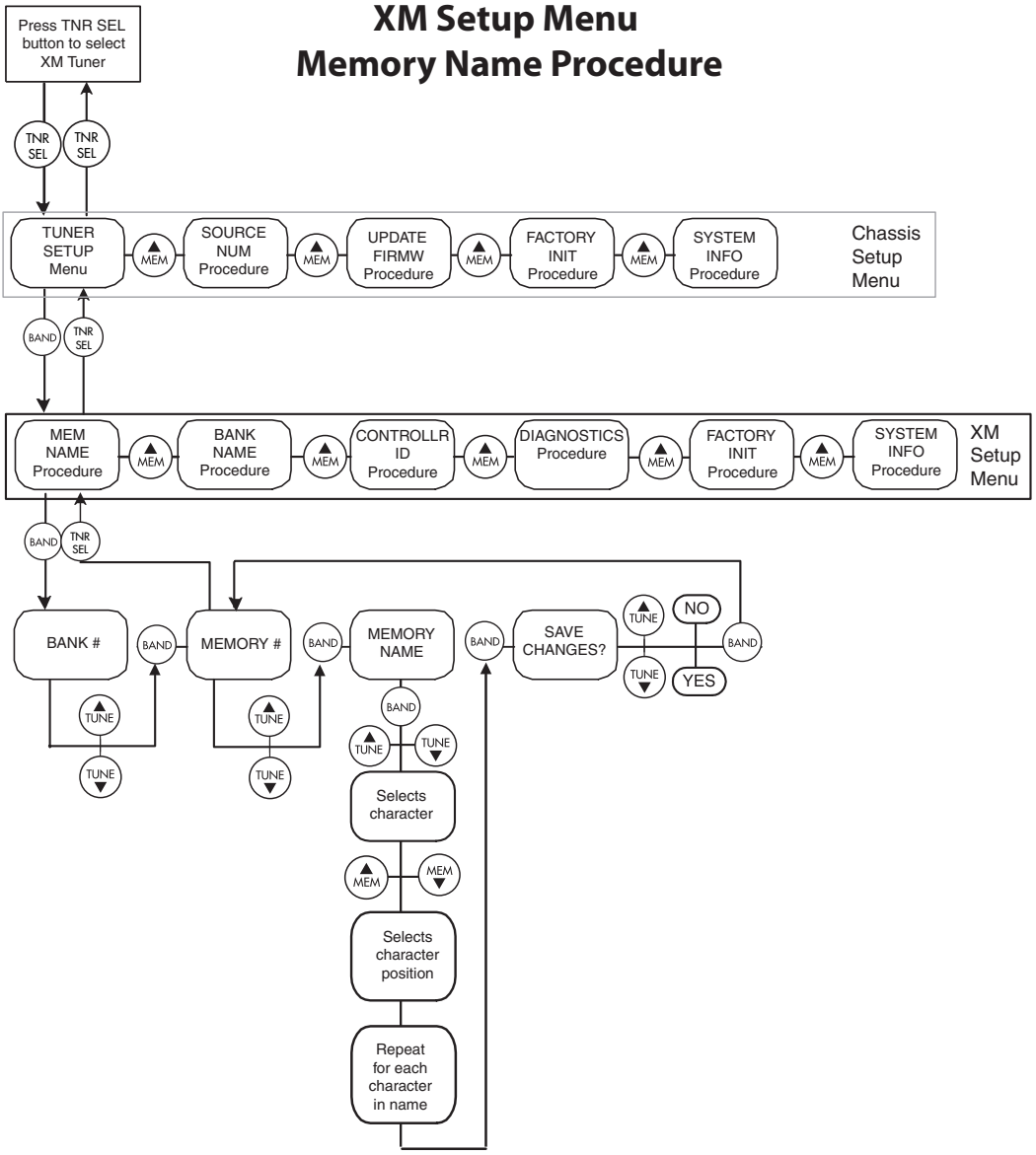

3. MEMORY NAME appears on the tuner.
4. Press BAND.
5. Bank # appears.
6. Press the Tune Up/Down buttons to select the Bank #.
7. Press BAND to advance. Memory # appears.
8. Press the Tune Up/Down buttons to select a Memory #.
9. Press BAND to advance. MEMORY NAME appears again.
10. Press BAND to access the Memory Name entry screen.
11. Press Tune Up/Down to select a character and MEM Up/Down to change a character position. Up to 12 characters can be entered one by one. A blinking cursor indicates the placement of the character being entered.
12. Press BAND when memory name is entered.
13. SAVE CHANGES will appear.
14. Press Tune Up/Down to select Yes or No.
15. Press BAND to save memory name. The Memory Name menu returns to the Memory # prompt to name other presets, or press TNR SEL to return to the Memory Name menu start.

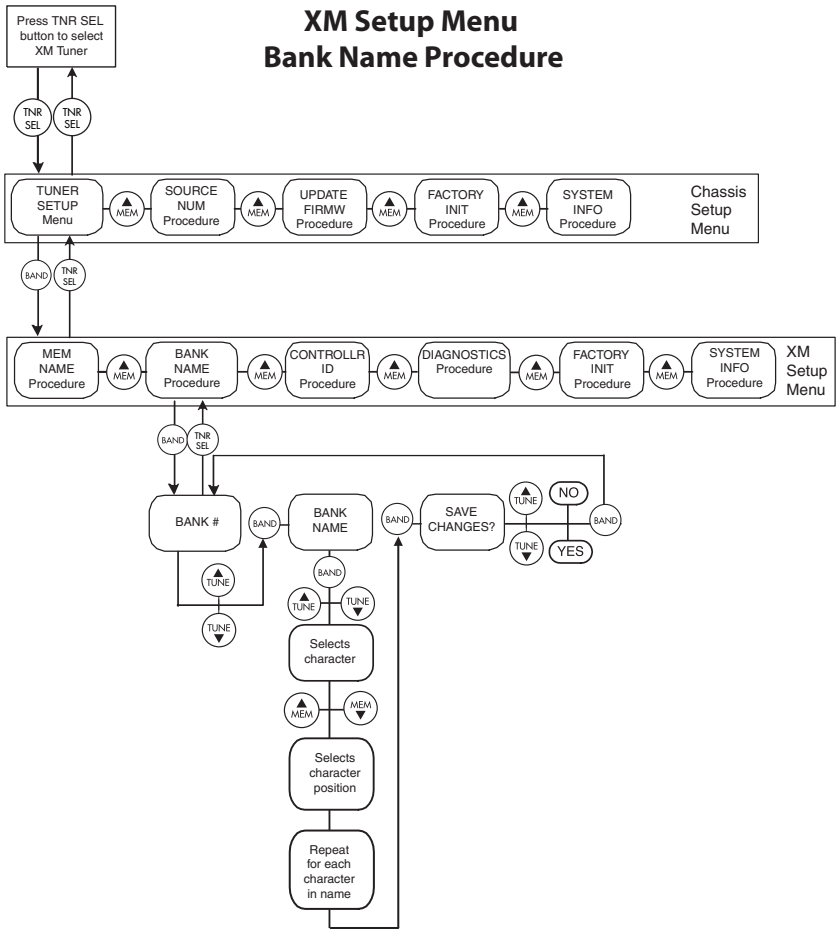

ST2-XM2 TUNER PROGRAMMING
ST2 TUNER SETUP MENU

Bank Name
A custom name can be assigned to each of the six banks of Tuner 1 (XM).

1. Enter the Setup Menu by pressing and holding the TNR SEL button.
2. TUNER SETUP appears. Press BAND.
3. MEMORY NAME appears. Press MEM Up/Down until BANK NAME appears on the tuner.
4. Press BAND.
5. Bank # appears.
6. Press the Tune Up/Down buttons to select the Bank #.
7. Press BAND. BANK NAME appears again.
8. Press BAND to access the Bank Name entry screen.
9. Press Tune Up/Down to select a character and MEM Up/Down to change a character position. Up to 12 characters can be entered one by one. A blinking cursor indicates the placement of the character being entered.
10. Press BAND when bank name is entered.
11. SAVE CHANGES will appear.
12. Press Tune Up/Down to select Yes or No.
13. Press BAND to save bank name. The Bank Name menu returns to the Bank # prompt to name other banks, or press TNR SEL to exit the Bank Name menu.

Controller ID
The Controller ID procedure is used to identify the controller(s) that the XM tuner will respond to.
Note: *For the XM module that is installed in the ST2-XM chassis, "All Controllers" will be the default setting.*

Diagnostics
The Diagnostics procedure is for factory use only.

Factory Initialization
The Factory Initialization procedure allows the erasure of all programmed settings of the XM tuner and returns them to the factory default settings.

1. Enter the Setup Menu by pressing and holding the TNR SEL button.
2. TUNER SETUP appears. Press BAND.
3. MEMORY NAME appears. Press MEM Up/Down until FACTORY INIT appears on the tuner.
4. Press BAND to enter the FACTORY INIT menu.
5. "Are you sure" appears on the tuner. Using the Tune Up/Down buttons, view the "Yes" and "No" selections.
6. Press BAND to select. A "No" selection returns to the top of the Factory Init menu. A "Yes" begins the initialization.
7. "Please wait" appears on the tuner during the process and "Cycle Power" appears when complete.
8. Cycle power on the ST2-XM tuner.

System Info
The System Info menu shows the ST2 Tuner's manufacturing build properties.
1. Enter the Setup Menu by pressing and holding the TNR SEL button.
2. TUNER SETUP appears. Press MEM Up/Down until SYSTEM INFO appears on the tuner.
3. Press BAND.
4. Press BAND at "Build Time" to view.
5. Press MEM Up/Down to advance.
6. Press BAND at "Build Date" to view.
7. Press MEM Up/Down to advance.
8. Press BAND at "Version" to view.
9. Press TNR SEL to exit the System Info menu.

(END OF XM TUNER SETUP)

Backup and Restore

Once all of the tuner settings are completed, it may be advisable to create a backup of the programmed settings for future use. The backup will then be available in case tuner settings need to be restored.

The backup and restore PC application "RNET Backup" is available through the Document Center at www.russound.com. Also required are a DB9 male-to-female cable and laptop or desktop PC.

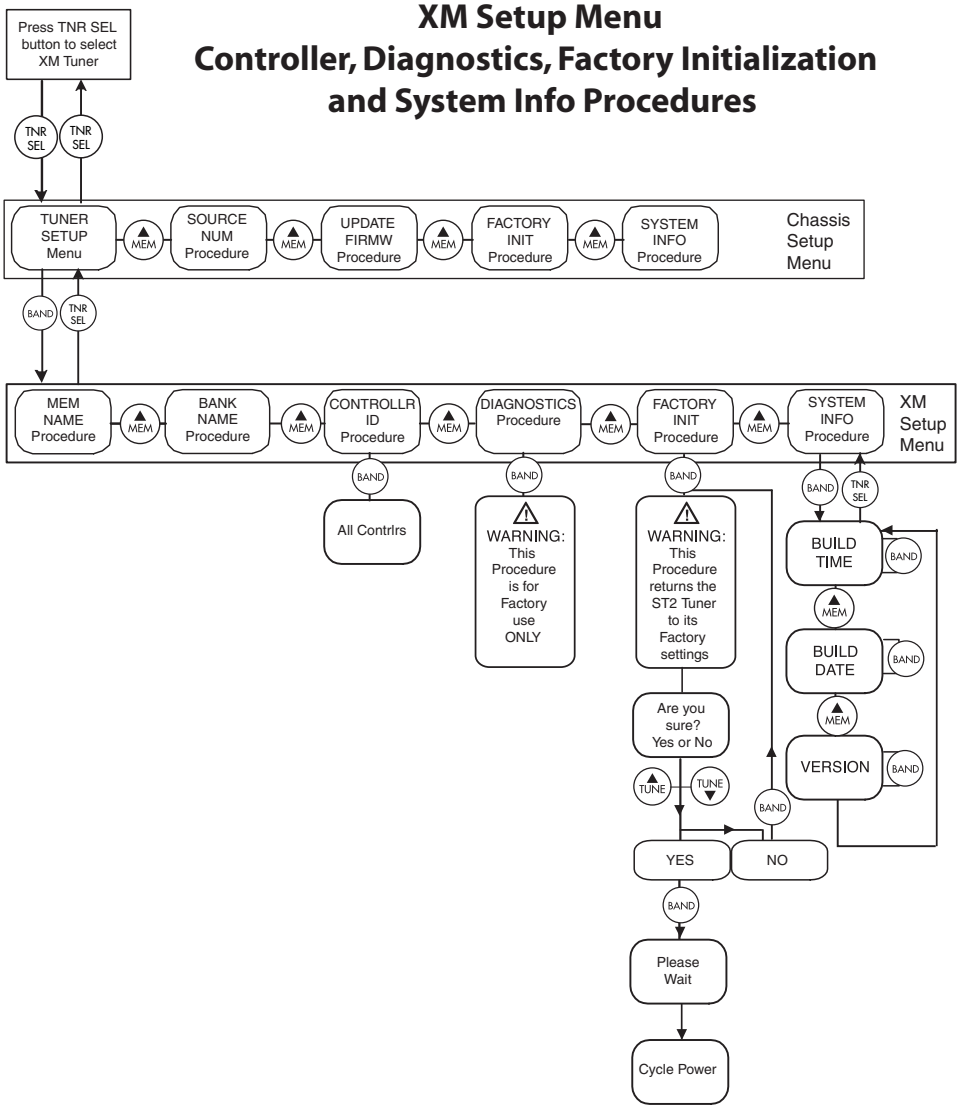

ST2-XM2 TUNER PROGRAMMING
PROGRAMMING FOR CAV6.6 USE

To Program the CAV6.6 to operate with the ST2-XM2 Tuner:
(refer to the CAV6.6 Instruction Manual for details)

1. Enter the Setup Menu by pressing the Setup button on the side of the UNO-S2 keypad.
2. SOURCE SETUP will appear. Enter the Source Setup Menu by pressing the Play button on the UNO-S2 keypad.
3. BASIC SETUP will appear. Enter the Basic Setup Menu by pressing the Play button again.
4. SOURCE NUM will appear. Use + and - buttons to select the source number to which Tuner 1 (XM) is connected. Press the Play button to enter your choice.
5. SOURCE NAME will appear. Use + and - buttons to select the name for the source (e.g., Tuner 1 or XM). Press the Play button to enter your choice.
6. COMMAND TYPE will appear. Select PERIPHERAL from the list. Press the Play button to enter this choice.
7. SAVE CHANGES? appears. Select “Yes” and press the Play button to save changes.
8. SOURCE NUM appears again. **Repeat steps 4 through 7 to configure the second tuner.**
9. Press the Setup button three times to back out of the Installation Menu.

Source Configuration Note:
When the ST2-XM2 Tuner is used with the CAV6.6 or other RNET controller, it is configured as an RNET command type “Peripheral” and is connected via the RNET bus. This makes the tuner behave as a fully integrated device with UNO-S2 keypad support. Each tuner must be set up with a unique source number (1 - 6) or unassigned. An unassigned tuner is not controlled by the RNET bus.

Key Function Note:
When using the tuner with the CAV6.6-S2 system, do not reassign keypad and remote buttons for tuner control in the CAV6.6 Key Configuration Menu. When the tuner is assigned the “Peripheral” command type in the CAV6.6 Setup Menu, key assignments and functions are automatically assigned and will operate as shown in the preceding UNO-S2 keypad and SRC2 remote control diagrams.

ST2-XM2 TUNER PROGRAMMING
PROGRAMMING FOR CAM6.6 USE

To Program the CAM6.6 (with no internal tuner) to operate with the ST2-XM2 Tuner:
(refer to the CAM6.6 Instruction Manual for details)

1. Enter the Setup Menu by pressing the Setup button on the side of the UNO-S1/S2 keypad.
2. PERIPH SETUP appears. Press the Next button to see SOURCE SETUP. Enter the Source Setup Menu by pressing the Next button on the UNO-S1 keypad.
3. BASIC SETUP will appear. Enter the Basic Setup Menu by pressing the Next button again.
4. SOURCE NUM will appear. Use Volume Up and Volume Down buttons to select the source number to which Tuner 1 (XM) is connected. Press the Power button to enter your choice.
5. SOURCE NAME will appear. Use Volume Up and Volume Down buttons to select the name for the source (e.g., Tuner 1 or XM). Press the Power button to enter your choice.
6. COMMAND TYPE will appear. Select PERIPHERAL from the list. Press the Power button to enter this choice.
7. SAVE CHANGES? appears. Select “Yes” and press the Power button to save changes.
8. SOURCE NUM appears again. **Repeat steps 4 through 7 to configure the second tuner.**
9. Press the Setup button three times to back out of the Installation Menu.

To Program the CAM6.6 (with internal tuner) to operate with the ST2-XM2 Tuner:
(refer to the CAM6.6 Instruction Manual for details)

When the CAM6.6 has an internal tuner installed in the Source 1 position, use sources 2 through 6 for the ST2-XM2.

Source Configuration Note:
When the ST2-XM2 Tuner is used with the CAM6.6 or other RNET controller, it is configured as an RNET command type “Peripheral” and is connected via the RNET bus. This makes the tuner behave as a fully integrated device with UNO keypad support. Each tuner must be set up with a unique source number (1 - 6) or unassigned. An unassigned tuner is not controlled by the RNET bus.

Key Function Note:
When using the tuner with the CAM6.6 system, do not reassign keypad and remote buttons for tuner control in the CAM6.6 Key Configuration Menu. When the tuner is assigned the “Peripheral” command type in the CAM6.6 Setup Menu, key assignments and functions are automatically assigned and will operate as shown in the preceding UNO-S2 keypad and SRC2 remote diagrams.

TECHNICAL SPECIFICATIONS

ST2-XM2 Smart Tuner

Dimensions:	17"W x 8"D x 1.8"H (43 x 20.3 x 4.4 cm)
Weight:	7 lbs. (3.2kg)
Power Supply:	12VDC 1.25A
XM Band:	2332.5 - 2345 MHz
XM Antenna:	50-ohm SMB connection

It is prohibited to copy, decompile, disassemble, reverse engineer, or manipulate any technology incorporated in receivers compatible with the XM Satellite Radio system. Furthermore, the AMBE® voice compression software included in this product is protected by intellectual property rights including patent rights, copyrights, and trade secrets of Digital Voice Systems, Inc. The user of this or any other software contained in an XM radio is explicitly prohibited from attempting to copy, decompile, reverse engineer, or disassemble the object code, or in any way convert the object code into human-readable form. The software is licensed solely for use within this product.

WARRANTY & REPAIR

The Russound ST2-XM2 is fully guaranteed against all defects in materials and workmanship for two (2) years from the date of purchase. During this period, Russound will replace any defective parts and correct any defect in workmanship without charge for either parts or labor.

For this warranty to apply, the unit must be installed and used according to its written instructions. If service is necessary, it must be performed by Russound. The unit must be returned to Russound at the owner's expense and with prior written permission. Accidental damage and shipping damage are not considered defects, nor is damage resulting from abuse or from servicing by an agency or person not specifically authorized in writing by Russound.

This Warranty does not cover:

- Damage caused by abuse, accident, misuse, negligence, or improper installation or operation
- Power surges and lightning strikes
- Normal wear and maintenance
- Products that have been altered or modified
- Any product whose identifying number, decal, serial number, etc. has been altered, defaced or removed

Russound sells products only through authorized Dealers and Distributors to ensure that customers obtain proper support and service. Any Russound product purchased from an unauthorized dealer or other source, including retailers, mail order sellers and online sellers will not be honored or serviced under existing Russound warranty policy. Any sale of products by an unauthorized source or other manner not authorized by Russound shall void the warranty on the applicable product.

Damage to or destruction of components due to application of excessive power voids the warranty on those parts. In these cases, repairs will be made on the basis of the retail value of the parts and labor. To return for repairs, the unit must be shipped to Russound at the owner's expense, along with a note explaining the nature of service required. Be sure to pack the unit in a corrugated container with at least three (3) inches of resilient material to protect the unit from damage in transit.

Before returning a unit for repair, call Russound at (603) 659-5170 for a Return Authorization number. Write this number on the shipping label and ship to:

Russound
ATTN: Service
5 Forbes Road
Newmarket, NH 03857

Due to continual efforts to improve product quality as new technology and techniques become available, Russound/FMP, Inc. reserves the right to revise system specifications without notice.

ST2-XM2
Smart Tuner

Instruction Manual

Russound
5 Forbes Road, Newmarket, NH 03857
tel 603.659.5170 • fax 603.659.5388
e-mail: tech@russound.com
www.russound.com
E. & O.E.

Copyright © 2006 Russound® All rights reserved.

All trademarks are property of their respective owners.

28-1170 Rev. 1 02/07/06